PIXLART 416

HARDWARE REV 1.0

USER MANUAL

V1.1

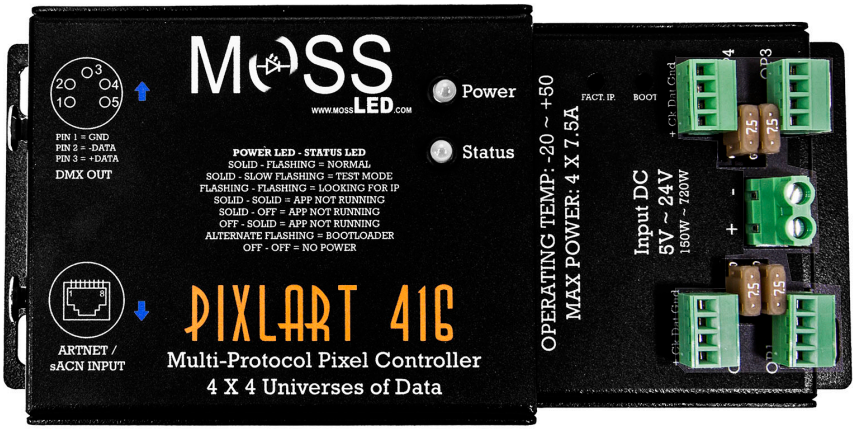

Contents

Contents 1
1 – Introduction 3
2 – Safety Notes 4
2.1 – Supplying Power 4
3 – Installation 5
3.1 – Power 5
3.1.1 - Output Fuses 5
3.1.2 - Logic Power 5
3.2 - Control Data 5
3.3 – Installing the Lights 5
4 – Network Configuration 7
4.1 – Network Layout 7
4.2 – IP Addressing 8
4.2.1 - Using a Router 8
4.2.2 - Using A Switch/Direct 8
4.2.3 - Forcing the Default IP Address 8
5 – Operation 10
5.1 – Startup 10
5.2 - Sending Data 10
5.3 – Outputs 10
5.3.1 – Pixel Outputs 10
5.3.2 – DMX512 Output 10
5.4 – Hardware Test Pattern 11
6 - Firmware Upgrades 12
6.1 - Physical Setup 12
6.2 - Obtaining New Firmware 12
6.3 - Performing an Update 12
6.4 - Performing a “Forced Boot” Update 14

7 - Specifications 14
8 –Troubleshooting 14
8.1 - LED Codes 14
8.2 - No Status/Power LEDs On 15
8.3 – No Pixel Control 15
8.4 - Other Issues 15
8.5 - Reset to Factory Defaults 15
9 - Warranty and Service 17

© 2018 Moss LED Inc.

1 – Introduction

This is the user manual for the hardware version 1.0 PixlArt416 pixel control board.

The PixlArt416 controller converts the E1.31 (sACN) or Art-net protocols from a lighting console, media server or computer lighting software into various other data protocols and outputs that data in real time to control pixel lighting fixtures.

The PixlArt416 features an output capacity of up to 24 universes of multicast/unicast E1.31 data or Art-net data. It can output an additional universe of DMX512 outputs in sACN/E1.31 mode, bringing the total E1.31 universes up to 25. This combined with an advanced feature-set and very easy to use configuration software make the PixlArt416 an excellent choice for your pixel lighting application.

Note that this manual covers the PixlArt416 controller with hardware revision V1.0 only. It only contains information specific to this physical control board, not the software configuration of PixlArt controllers in general.

Please refer to the Diode Manager manual available on the PixlArt416 product page on our website.

© 2018 Moss LED Inc.

2 - Safety Notes

2.1 – Supplying Power

Power to the controller and outputs is applied via a screw terminal connector, located on the left-hand edge of the controller as shown in Figure 1. This connector is clearly marked on the chassis with the polarity.
The voltage input can be anywhere between 5V and 24V DC independently and it is the user's responsibility to ensure that the power supply used matches the voltage of the pixel fixture they are using and that it can supply the correct amount of power/current. The total maximum allowable current through the controller is 30 Amps.

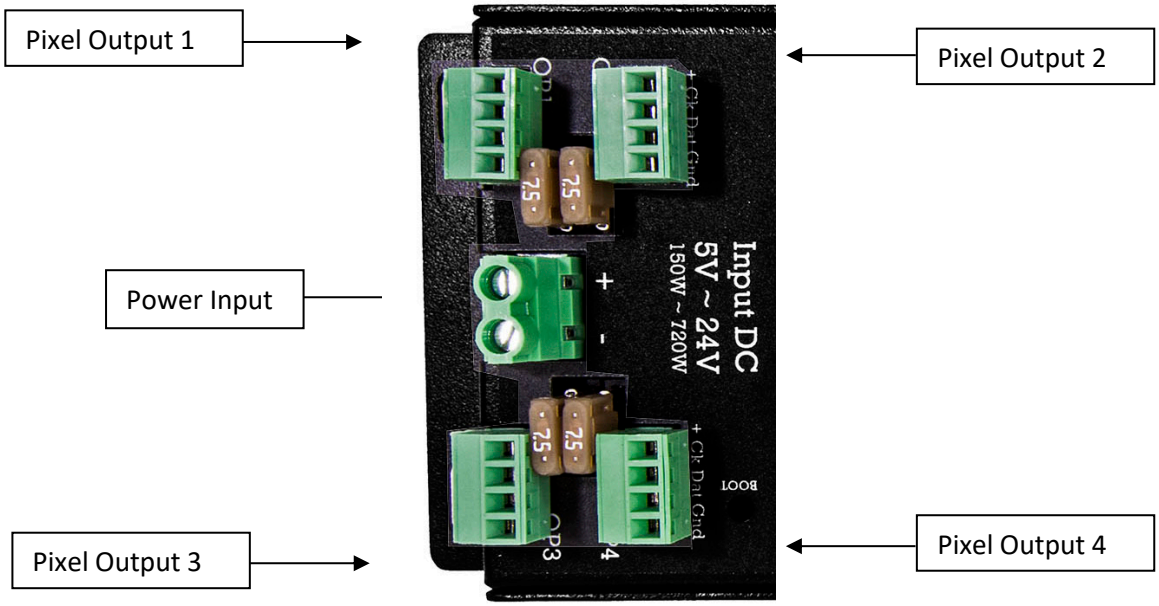

Figure 1

© 2018 Moss LED Inc.

3 – Installation

3.1 – Power

3.1.1 - Output Fuses

Each individual output is protected by a 5A mini blade fuse. These may be changed to a higher or lower value depending on your specific application, provided any individual output does not exceed 7.5A and the total bank current capacity does not exceed 30A. If you require more current than this, then you will need to inject power into the pixels directly off board.

3.1.2 - Logic Power

No on-board power configuration is required. Power to the logic circuitry is automatically regulated from the power input. Simply connect your power supply of between 5V and 24V DC to the power input screw terminal (shown in Figure 1). Logic power is fused using an on-board 500mA self-resetting polyfuse. This fuse will automatically trip very quickly in a fault condition and then re-set once normal operation resumes.

3.2 - Control Data

Control data to the PixlArt416 is achieved via the single horizontal Ethercon jack. The controller supports Streaming ACN (sACN / E1.31) or Art-Net data.

3.3 – Installing the Lights

The pixel LEDs are connected directly via the pluggable screw terminal connectors located on the left-hand edge of the controller. Each connector is labeled with its output channel number (1-4) and there is a pin-out for the connectors clearly marked on the chassis for quick reference. Simply wire your pixels into each screw terminal and then plug them into the mating sockets. The pin-out for the connectors in normal mode is also shown in Figure 2 on the following page. We recommend connecting all outputs to the PixlArt 416 de-energized to reduce the chance of an over-current surge which may cause the output fuse to 'blow'.

 © 2018 Moss LED Inc.

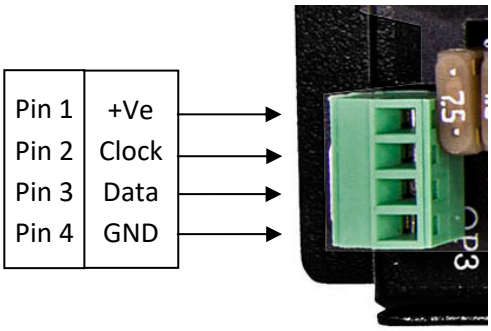

Figure 2 – Normal mode pinout

Some pixel protocols do not use the clock line and lights of this type will only have 3 wires. In this case you can leave the clock line disconnected.

Warning: It is very important not to short +Ve onto the clock or data lines when using pixels greater than 5v. Note that this can also happen from poor waterproofing when rain shorts the higher voltage onto either of those wires in your pixels/wiring.

© 2018 Moss LED Inc.

4 – Network Configuration

4.1 – Network Layout

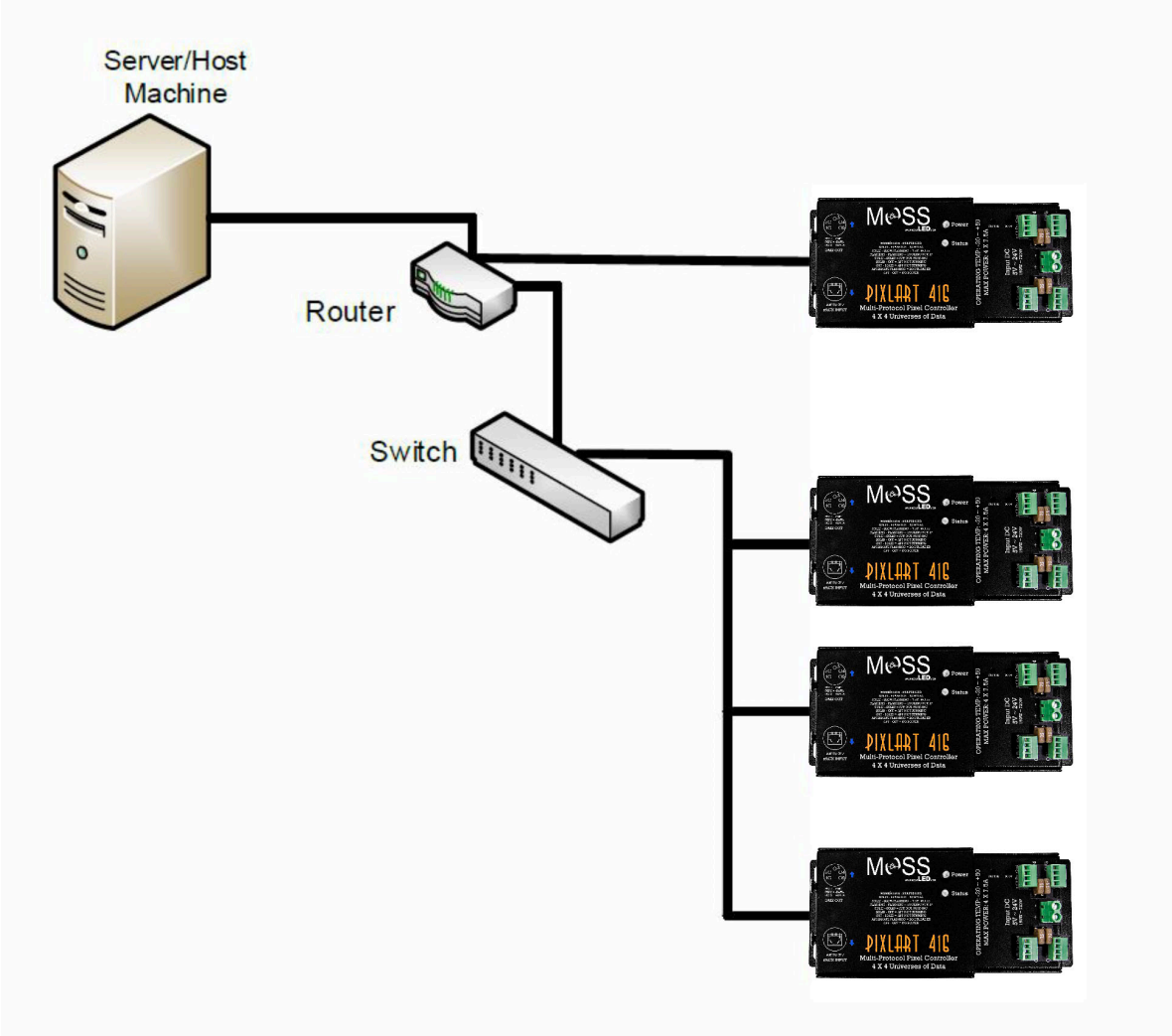

Figure 4

Figure 4 shows a typical network topology for the PixlArt416 controller(s) LAN. The host machine typically connects to a router and then to the controller(s). If you are only using a few controllers, they can be connected straight to the router. Larger installations will benefit from using a network switch between the router and controllers. Very large installations (E.g. 50 or more universes in multicast mode) will also benefit from the use of an IGMP snooping enabled network switch and router.

In a single controller installation, it may be preferable to connect the controller directly to the host machine's network adapter.

© 2018 Moss LED Inc.

The PixlArt416 controller(s) can also be integrated straight into any pre-existing LAN such as your media, home or office network.

4.2 – IP Addressing

4.2.1 - Using a Router

Routers have a DHCP server in them – this means they will tell a device plugged into them what IP address to use, if asked.

DHCP is always enabled by default on a PixlArt416 controller so it can immediately connect to any existing network with a router. However, it is recommended that you assign a static IP address once communications have been established via Diode Manager. If the controller is in DHCP mode and is not assigned an IP address by a DHCP server, it will timeout and default to a static IP of 192.168.0.50

If DHCP mode is enabled, both LEDs will flash together until the controller receives an IP address, at which point the power LED will remain on solid and the status LED will flash slowly indicating it is in run mode and ready for use.

If a static IP address is assigned to the board, then the power LED will be solid from power up. If a DHCP timeout occurs the power LED will stop flashing and go solid also.

4.2.2 - Using A Switch/Direct

It may be desirable to connect the controller directly to a switch or even directly to the host machine instead of using a router. In this case (for first time configuration) you will need to ensure that the network adapter of your computer is set in the IP range that the controller will default to (controller defaults to 192.168.0.50). This means you PC's IP should be 192.168.0.xxx where xxx is anything between 1 and 254 other than 50. The subnet mask on your PC should be set to 255.255.255.0.

Once you can successfully discover the controller in the Diode, we recommended setting the controller to a static IP address other than the default.

Figure 5 shows a screenshot of typical computer network settings to communicate with a PixlArt416 for the first time without a router.

 © 2018 Moss LED Inc.

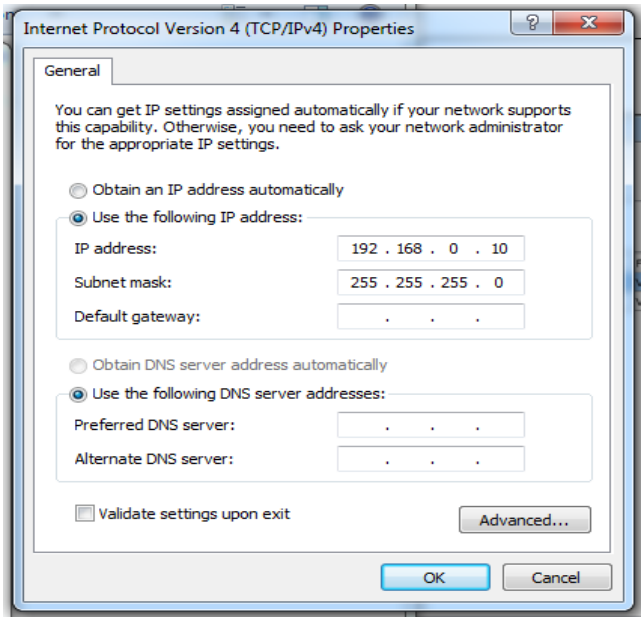

Figure 5

Note: You can also connect the PixlArt416 directly to a PC.

4.2.3 - Forcing the Default IP Address

In the event that you forget the IP of a controller and you can't see it in the Diode Manager, it can be forced to its default IP. A simple procedure can be employed on power up:

1. Hold down the "Factory IP" button and power up the board
2. After a few seconds release the button. The controller's IP address will now be 192.168.0.50.

You should now be able to setup your PC's network settings to find the controller at this IP and change the IP settings to what you prefer. After changing the settings or if you power the controller off and on again, the controller will revert to using the saved settings.

© 2018 Moss LED Inc.

5 – Operation

5.1 – Startup

Upon applying power, if you already have pixels connected they may flash very briefly and then immediately turn off as the controller takes control of the pixels**.** If no data is being sent to the controller, then the pixels will remain turned off until valid data is received**.** During normal operation the green power LED will remain on solid and the status LED will flash slowly to indicate the controller is connected to a valid network and is ready to run**.** If the pixels are not controllable then make sure you have selected the correct pixel IC type in the Diode Manager config under the 'LEDs' tab**.**

If no incoming data is received for a period of time, the pixels will be turned off automatically unless that option has been disabled in your configuration**.**

5.2 - Sending Data

Input data is sent from the control PC/server/lighting console to the controller via Ethernet using a "DMX over IP" protocol such as sACN (E1.31) or Art-net.

5.3 – Outputs

5.3.1 – Pixel Outputs

Each of the 4 outputs can drive up to 682 individual RGB pixels, or 512 RGBW pixels (4 DMX Universes of data). This allows for a total of 2,730 pixels to be driven out of the one controller (in addition to 1 DMX512 Universe output.) In expanded mode this limit is halved but the number of outputs is doubled, equaling the same number of total pixels. Driving a full 682 pixels out of a single output would also likely require power injection. How much power you need to inject and how often will typically vary depending on the number of pixels used, their voltage and their individual power consumption.

The refresh rate of the pixels will depend on the operating frequency of the specific pixel IC chip type. Higher speed chips will result in higher refresh rates. PIXELS WITH NO CLOCK LINE ARE SLOW. The refresh rates on these pixels is unavoidably slower than clocked pixels. Moss LED recommends the use of clocked pixels whenever using a large number of sequential pixels on any output. Typically, the refresh rate can vary from 20 fps at the low end and up to 100 fps at the higher end.

5.3.2 – DMX512 Output

The PixlArt416 provides a DMX512 output which can be accessed by a 5-Pin Female XLR. The hardware layer on which the DMX 512 protocol operates is the RS485 electrical communications standard. This is a differential transmission system consisting of a two-wire differential twisted pair and single wire ground connection.

 © 2018 Moss LED Inc.

This output acts as an individual DMX512 universe output, effectively providing the user with an E1.31 to DMX512 bridge (**in addition** to the normal pixel outputs). These do **not** convert Art-net data to DMX, only sACN (E1.31).

The DMX outputs are **not** electrically isolated and are not recommended for commercial/industrial use.

All these connectors and jumper links are located on the far left-hand edge of the board as shown in figure 6.

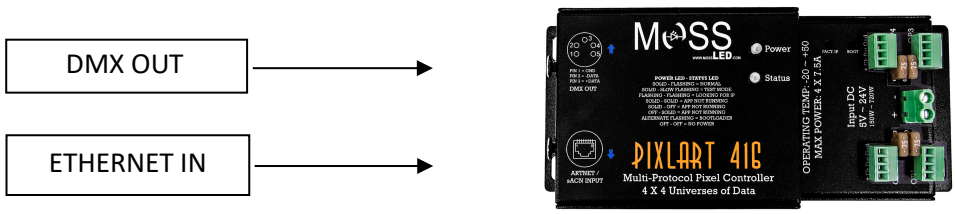

Figure 6

5.4 – Hardware Test Pattern

The controller features a built-in test pattern to assist in troubleshooting during an installation. To put the controller into this mode, press and hold the 'Factory IP' button for 3 seconds (*after* the controller is already running.) The controller will then enter the test pattern mode and will display red, green, blue and white sequentially in a repeating pattern on all pixels on each of the 4 outputs.

Pressing the button while in this mode will then cycle through each of the four colors successively (on all outputs simultaneously) before returning to the current pattern again.

To exit the test mode press and hold the 'Factory IP' button down again for 3 seconds and then release.

The hardware test requires that the pixel driver chip type and number of pixels per output are set correctly in the configuration. In this way you can test if that part of your configuration is correct and isolate other possible problems with the incoming Ethernet data side.

© 2018 Moss LED Inc.

6 - Firmware Upgrades

The controller is capable of having its firmware upgraded (new software). An upgrade is typically performed to add new features and to fix any bugs that may have been overlooked in previous versions.

6.1 - Physical Setup

To perform a firmware upgrade, ensure that you have your PixlArt connected to the LAN network as per section 4.1.1.

6.2 - Obtaining New Firmware

For the latest firmware please visit MossLED website and visit the PixlArt 416 product page.

The file you need comes in a ".hex" format that must be first unzipped from the ".zip" file you download.

6.3 - Performing an Update

1. Open the Diode Manager. Click "Search" and once the desired controller appears in the main window, double click on it.
2. A configuration window will appear. Click on the "Misc" tab and then locate the "Upgrade Firmware" button and click on it. A "firmware update" window will appear (as shown in Figure 8).
3. Click "browse" to locate the firmware file you wish to download.
4. Click on the "update" button.
5. Once the download is complete, a message box will pop up saying it has completed successfully.
6. The controller will automatically reboot itself and then start running the new firmware application immediately.
7. The settings will be kept from before.

If there is something wrong with the upgraded firmware, repeat the process again if it is still visible in the Diode Manager. Otherwise, refer to the troubleshooting section for further information.

 © 2018 Moss LED Inc.

6.4 - Performing a "Forced Boot" Update

1. Power down the controller.
2. Hold down the "Bootloader" button.
3. Apply power, the status and power LEDs should be flashing alternately to indicate the controller is in bootloader mode. It is now ready for a firmware upgrade.
   The bootloader will default to an IP address of 192.168.0.50 so you must **ensure you are running it on a network in the same address range as this IP address** (eg. 192.168.0.10).
4. Using Diode Manager, click search in the main window and you should see the controller appear with "bootloader" in the firmware column. Double clicking on it will bring up the file browse window as shown in Figure 8.
5. Click browse to locate the firmware file.
6. Click on the "update" button.
7. Once the download is complete, a message box will pop up saying it has completed successfully.
8. The controller will automatically reboot itself and then start running the new firmware application immediately.
9. The settings will be kept from before.

If you have performed a forced update and there are still problems, then you should try a factory reset as described in section 8.5. This will reset all settings back to the factory default ones after you've updated already to the latest firmware.

 © 2018 Moss LED Inc.

7 - Specifications

The table below specifies the recommended operating conditions for a PixlArt controller.

PARAMETER	VALUE/RANGE	UNITS	TOLERANCE
Power Bank Input	5-24	V DC	+/-5%
Max Capacity	30	A	+/-5%
Logic Current Consumption (@ 5V)	130	mA	+/-10%
Aux Output Max	15	W	+/-10%
Operating Temperature	-40 to +80	°C	+/-5%
Storage Temperature	-50 to +150	°C	+/-5%
Individual Outputs (Max)	5	A	NA

Table 1

© 2018 Moss LED Inc.

8 –Troubleshooting

8.1 - LED Codes

Generally, controller status troubleshooting requires looking at the status and power LEDs on the controller.

Please refer to the table below for condition codes for the onboard status and power LEDs.

POWER LED (GREEN)	STATUS LED (RED)	CONDITION
SOLID	FLASHING	NORMAL OPERATION, MAIN APPLICATION RUNNING OK
SOLID	SLOW FLASHING	TEST MODE RUNNING
FLASHING TOGETHER	FLASHING TOGETHER	LOOKING FOR IP ADDRESS (DHCP MODE)
SOLID	SOLID	MAIN APPLICATION NOT RUNNING
SOLID	OFF	MAIN APPLICATION NOT RUNNING
OFF	SOLID	MAIN APPLICATION NOT RUNNING
ALTERNATE FLASHING	ALTERNATE FLASHING	BOOTLOADER MODE
OFF	OFF	NO POWER

Table 2

Please refer to the table below for condition codes for the Ethernet jack status LEDs.

LINK LED (GREEN)	DATA LED (YELLOW)	CONDITION
SOLID	RAPID FLASHING	CONNECTED OK, RECEIVING DATA
SOLID	OFF	CONNECTED OK, NO DATA
OFF	OFF	NO LINK ESTABLISHED, OR POWER IS OFF

Table 3

© 2018 Moss LED Inc.

8.2 - No Status/Power LEDs On

Ensure that your power supply is supplying correct voltage as per section 3.1.1. Also ensure that it can supply enough power to drive the lights that are connected. You should also try disconnecting all outputs and see if the controller starts then. If the supplied power is correct, try performing a forced firmware update as per section 6.4.

8.3 – No Pixel Control

Check that the correct pixel IC type has been selected in the dropdown box in the Diode Manager config under the 'LEDs' tab. Also check the physical wiring and pinout of the pixels as well as the output fuse.

8.4 - Other Issues

Try performing a factory default reset on the device as per section 8.5 below. If the device still fails to perform as expected, please check the LED codes as per section 8.1. For the latest more specific troubleshooting information and other help, please contact our Technical Dept.

You can also send an e-mail to technical@mossled.com and a ticket will be automatically created for you.

8.5 - Reset to Factory Defaults

To reset the controller to its factory default settings, do the following:

1. Hold down the "Factory IP" button AND the "Bootloader" buttons together before applying power.
2. Power up the board.
3. Wait for both LEDs to flash together.
4. Release both buttons.
5. Power cycle (turn power off, wait 5 seconds then turn it on again).

© 2018 Moss LED Inc.

9 - Warranty and Service

If you require support or warranty, please refer to section 8.4 for information on creating a support ticket. For warranty cases the support staff will usually require you to perform some troubleshooting steps first. If we cannot solve your problem remotely we will issue you with an RMA number through the support ticket system. You may then either return the device to a local distributor or return it to us directly for warranty services.

The PixlArt416 is supplied with a full 1-year factory warranty.

© 2018 Moss LED Inc.