MOSS LED
WWW.MOSSLED.COM

CINQUE - LED DMX DIMMER

5 CHANNEL X 8 AMP DMX512 DECODER
V 3.2

Our most advanced standalone DMX Dimmer Ever. The Cinque-LED DMX Dimmer is fantastic. All the features our film, television, and theatrical friends have been asking for have been included. High current rating, smooth dimming, adjustable PWM frequency, 8-bit and 16-bit options, full manual mode, RDM control, XLR5 and RJ45 connections, Protect-A-FET technology, as well as UL certified as a component.

New Features in V 3.2

1. Brought back Terminal Block DMX I/O
2. PWM Frequency adjustable via RDM

PROTECT-A-FET

Input 40A MAX 12V to 24V DC	Output 12V to 24V DC 8A per Channel 480 Watts /960 Wattes	PWM Frequency 500Hz to 35KHz	Resolution 8 Bit & 16 Bit
DMX512 5 Channel	Manual Mode	DMX RDM	UL Listed E489028
IP Rating IP 20	Temperature Range -20°C to + 70°C -40°F to + 158°F	Dimensions L 164mm 6-9/20" W 73mm 2-7/8" H 38mm 1-1/2"	Weight 300g 10.5 oz

CONT	DMX	5CH	12V24V	LCD
Controller	Input Signal	Number of channels	Input voltage	Display

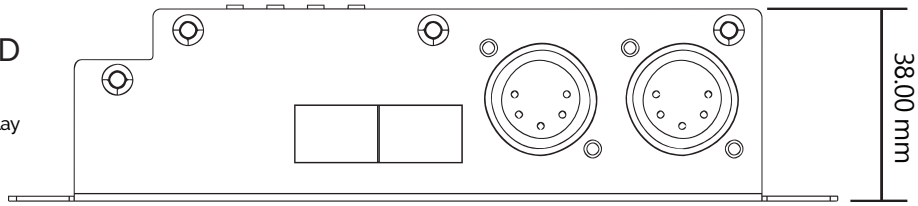

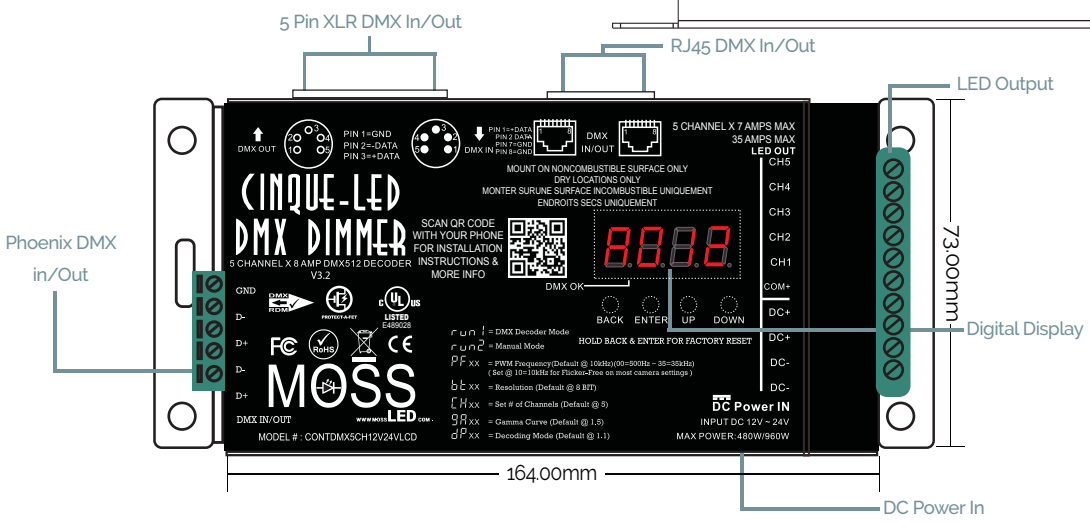

DO NOT install with power applied to device.
DO NOT expose device to excessive moisture.
Indoor use only.

WIRING DIAGRAM

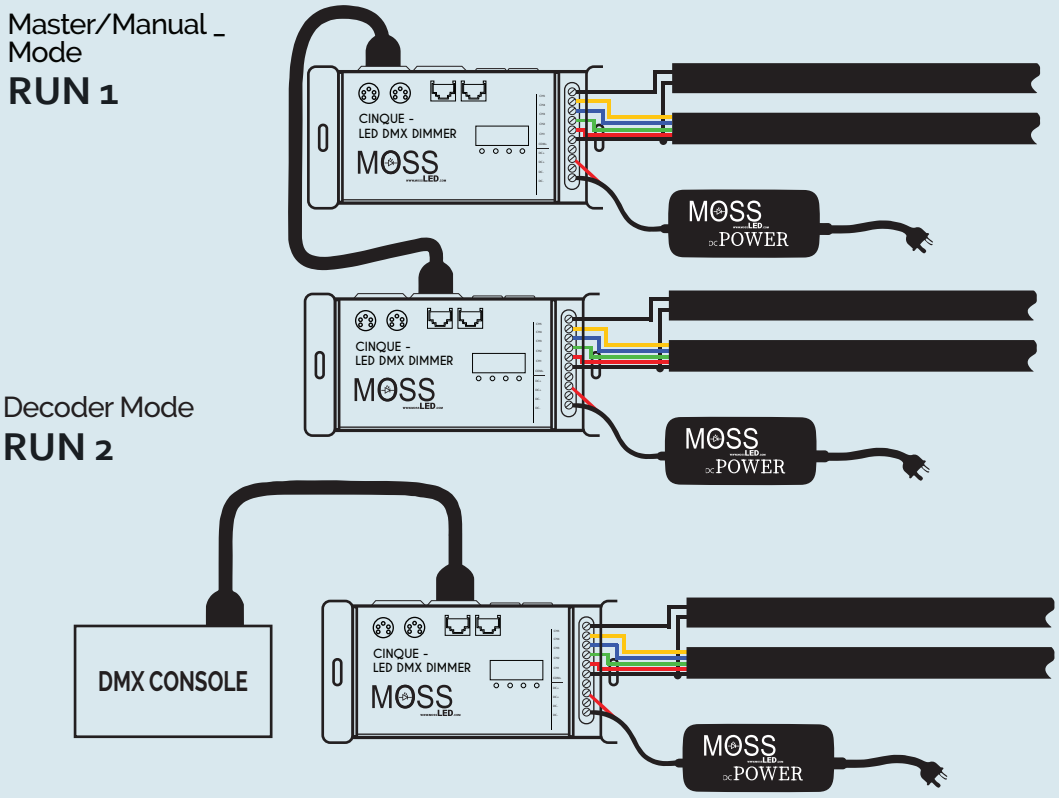

OPERATION

DMX Mode (Decoder Mode)

Using the "Up/DOWN" buttons you can cycle through the following menus.

A.XXX	DMX address 1 to 507, default set to 001. The decimal after the "A" indicates reciving a DMX signal.
CH XX	DMX channel quantity, default set to CH05
bt XX	Bit resolution 8bit/16bit, default set to 16bit
PF XX	PWM frequency 500Hz to 35KHz, default set to 10KHz
GA XX	Dimming gamma curve value, default set to1.5
DP XX	Decoding mode, default set to dP1.1
R N 1	Switch between DMX Mode and Manual Mode

Protect-A-FET

When a short circuit occurs all the outputs will stop functioning and the LED display with flash.
Power cycle it (turn it off then on again) to restore normal operation.

Manual Mode (Master Mode)

To enter Manual Mode use the "UP/DOWN" and set to "run 1" press "ENTER"
then with the "UP" button set to "run 2". Press "BACK" to confirm. Power cycle the unit.
The following menu will apear.

P.XXX	Program 1 to 31. P01 channel 1 is on P02 channel 2 is on etc...
1 XX to 5 XX	Manual control over channels 1 to 5 from 00 to FL
B XX	Program brightness 1 to 8
S XX	Program speed 1 to 16
R N 2	Switch between DMX Mode and Manual Mode

1. Set DMX Address
To set the DMX address select menu A.XXX, press "ENTER" the display will flash.
Press "UP/DOWN"to set the DMX address. Press "BACK" to confirm.

2. Set Channel Quantity
Select menu CH XX, press "ENTER" the display will flash. Press "UP/DOWN"
and set the DMX channel quantity. Press "BACK" to confirm.

Example: DMX address is set to 001.
CH01 : DMX Footprint = 1 (DMX address for all channels is 001)
CH02 : DMX Footprint = 2 (DMX address 001 for channels 1&3. DMX address 002 for channels 2, 4&5)
CH03 : DMX Footprint = 3 (DMX address 001&002 for channels 1, 2. DMX address 003 for channels 3, 4&5)
CH04 : DMX Footprint = 4 (DMX address 001&002&003 for channels 1, 2&3. DMX address 004 for channels 4&5)
CH05 : DMX Footprint = 5 (DMX address 001,002,003,004&005 for channels 1, 2, 3, 4 ,5 respectively)

3. Resolution
Select menu bt XX , press "ENTER" the display will flash. Press "UP/DOWN"
to choose 8bit or 16bit. Press "BACK" to confirm.

4. PWM Frequency
Select menu PF XX, press "ENTER" the display will flash. Press "UP/DOWN"
to choose from 00 to 35. Press "BACK" to confirm. Default @ 10khz.

00 = 500Hz	03 = 3KHz	06 = 6KHz	09 = 9KHz	14 = 14KHz	20 = 20KHz
01 = 1KHz	04 = 4KHz	07 = 7KHz	10 = 10KHz	16 = 16KHz	25 = 25KHz
02 = 2KHz	05 = 5KHz	08 = 8KHz	12 = 12kHz	18 = 18KHz	35 = 35KHz

5. Gamma Curve Value
Select menu GA XX , press "ENTER" the display will flash.
Press "UP/DOWN" to choose 0.1 to 9.9. Press "BACK" to confirm.

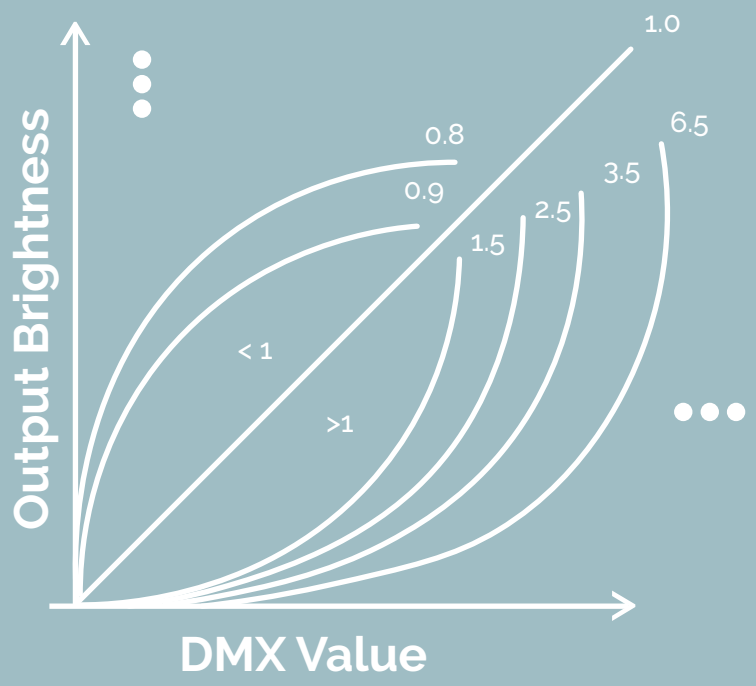

*Gamma adjusts the dimming curve of the unit so you can have an extremely high resolution low end or an extremely high resolution high end.

DMX Address is 001, CH04

DMX CHANNEL	FACTORY DEFAULT dp 1.1	TRUE 16-BIT dp 2.1	dp 5.4	dp 6.4
1	Output 1 dim	Output 1 dim	Output 1 dim	Output 1 dim
2	Output 2 dim	Output 1 fine dim	Output 2 dim	Output 2 dim
3	Output 3 dim	Output 2 dim	Output 3 dim	Output 3 dim
4	Output 4,5 dim	Output 2 fine dim	Output 4,5 dim	Output 4,5 dim
5		Output 3 dim	master dim	master dim
6		Output 3 fine dim		strobe effects
7		Output 4,5 dim		
8		Output 4,5 fine dim		

DMX Address is 001, CH05

DMX CHANNEL	FACTORY DEFAULT dp 1.1	TRUE 16-BIT dp 2.1	dp 6.5	dp 7.5
1	Output 1 dim	Output 1 dim	Output 1 dim	Output 1 dim
2	Output 2 dim	Output 1 fine dim	Output 2 dim	Output 2 dim
3	Output 3 dim	Output 2 dim	Output 3 dim	Output 3 dim
4	Output 4 dim	Output 2 fine dim	Output 4 dim	Output 4 dim
5	Output 5 dim	Output 3 dim	Output 5 dim	Output 5 dim
6		Output 3 fine dim	master dim	master dim
7		Output 4 dim		strobe FX
8		Output 4 fine dim		
9		Output 5 dim		
10		Output 5 fine dim		

The data definitions for strobe channel are as follows:

{0, 7}, //undefined
{8, 65},//slow strobe ->fast strobe
{66, 71},//undefined
{72, 127},//slow push fast close
{128, 133},//undefined
{134, 189},//slow close fast push
{190, 195},//undefined
{196, 250},//random strobe
{251, 255},//undefined

The supported RDM PIDs are as follows:

DISC_UNIQUE_BRANCH
DISC_MUTE
DISC_UN_MUTE
DEVICE_INFO
DMX_START_ADDRESS
IDENTIFY_DEVICE
SOFTWARE_VERSION_LABEL
DMX_PERSONALITY
DMX_PERSONALITY_DESCRIPTION
SLOT_INFO
SLOT_DESCRIPTION
MANUFACTURER_LABEL
SUPPORTED_PPARAMETERS

Restore to Factory Default Settings
Press and hold down both "Menu" & "Enter" keys until the digital display turns off, then release the keys. The system will reset and the digital display will turn on again. All settings will be restored to factory default.

Factory Default Settings

A.001 CH 05 B 16
PF 10 SA 1.5 DP 1.1

6. Decoding Mode
Select menu DP XXX, press "ENTER" the display will flash.
Press "UP/DOWN" to choose the decoding mode. Press "BACK" to confirm.

DMX Address is 001, CH01

DMX CHANNEL	FACTORY DEFAULT dp 1.1	TRUE 16-BIT dp 2.1
1	All output dim	All output dim
2	Not in use	All output fine dim

DMX Address is 001, CH02

DMX CHANNEL	FACTORY DEFAULT dp 1.1	TRUE 16-BIT dp 2.1	dp 3.2
1	Output 1,3 dim	Output 1,3 dim	Output 1,3 dim
2	Output 2,4,5 dim	Output 1,3 fine dim	Output 2,4,5 dim
3		Output 2,4,5 dim	All output dim
4		Output 2,4,5 fine dim	

DMX Address is 001, CH03

DMX CHANNEL	FACTORY DEFAULT dp 1.1	TRUE 16-BIT dp 2.1	dp 4.3	dp 5.3
1	Output 1 dim	Output 1 dim	Output 1 dim	Output 1 dim
2	Output 2 dim	Output 1 fine dim	Output 2 dim	Output 2 dim
3	Output 3,4,5 dim	Output 2 dim	Output 3,4,5 dim	Output 3,4,5 dim
4		Output 2 fine dim	master dim	master dim
5		Output 3,4,5 dim	All output dim	strobe FX
6		Output 3,4,5 fine dim		

Troubleshooting the Cinque/Dodici/ VentiQuattro DMX LED Dimmers

Troubleshooting guide for the Cinque-LED with and without Protect-A-FET. Refer to manual for more information on operation.

LED channel always ON/ no control	-MOSFET damaged, replace. Source shorted to GND.
LED channel always OFF/no control	-Check LED tape for short/wired correctly -Check internal fuse (marked as 'L' looks like a resistor) -Check power
All channels act as one.	-Setting "CHXX" should be set to CH05. -Reset unit by pressing "Enter" & "Back" at the same time until the display flashes once.
LED display flashing	-The Protect-A-FET detected a short and has auto shut off. -Find and remove short. Power cycle to return to normal operation.
Not getting any output	-Check if LED display of the Cinque is flashing. If flashing power cycle unit. -Check LED tape for short/wired correctly -All MOSFETs could be damaged, replace

IMPORTANT NOTES:

Setting in DMX Mode affects Manual Mode.

When in DMX Mode and the "run" setting is set to "run 2" then at any point when power is removed and the applied the Cinque will go into Manual Mode. Same if in Manual Mode and the "run" setting is set to "run 1". This may cause issues when there are more devices connected to a DMX signal.

When the Cinque is in Manual Mode it will send a DMX signal out! Refer to the wiring diagram in the manual.